Natural talents

Kramer Allrad Wheel Loaders

350 • 750 • 850 • 950 • 1150

kramerALLRAD®

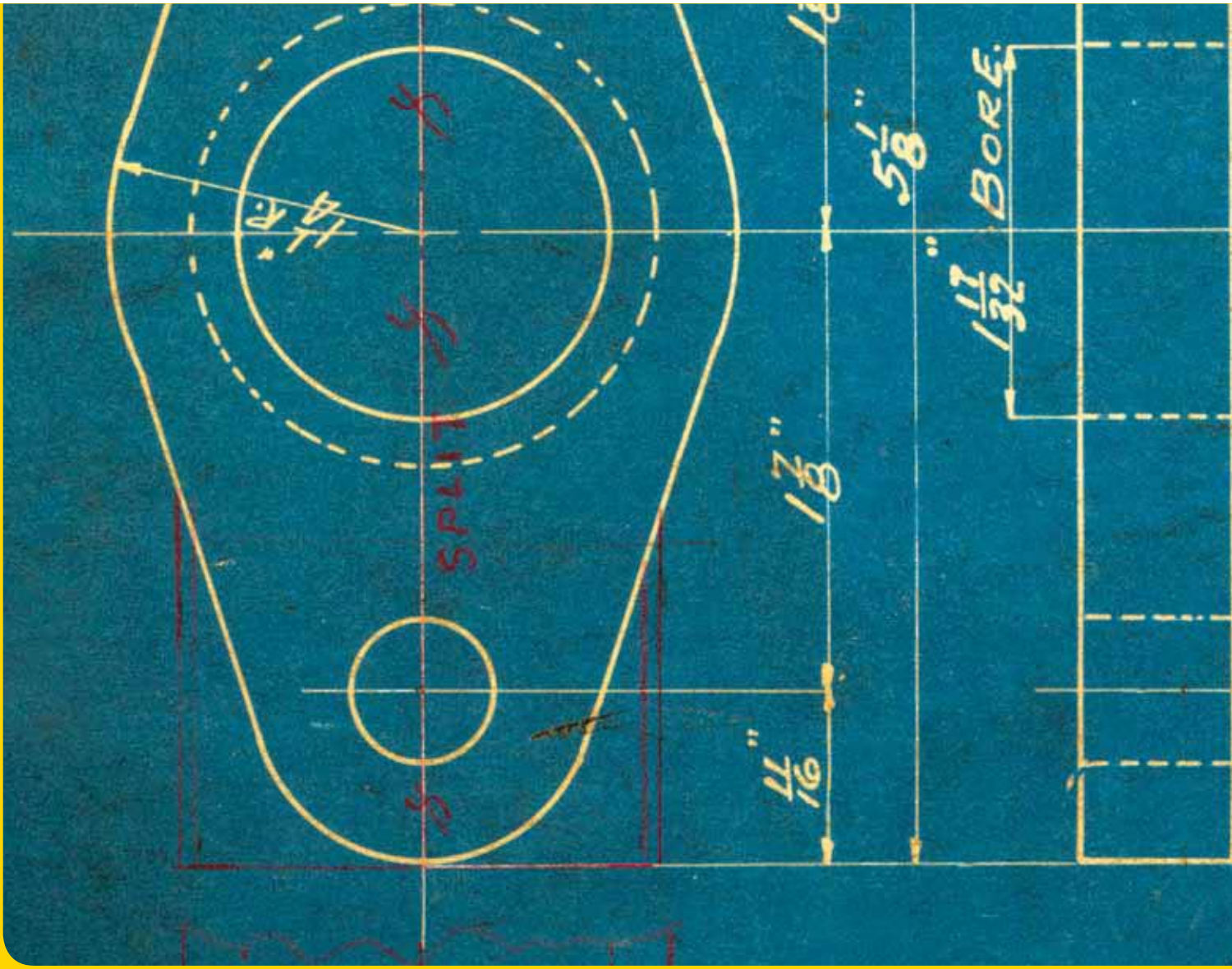

Good investments. Proud heritage. Constant improvement.
The cream will always rise to the top.

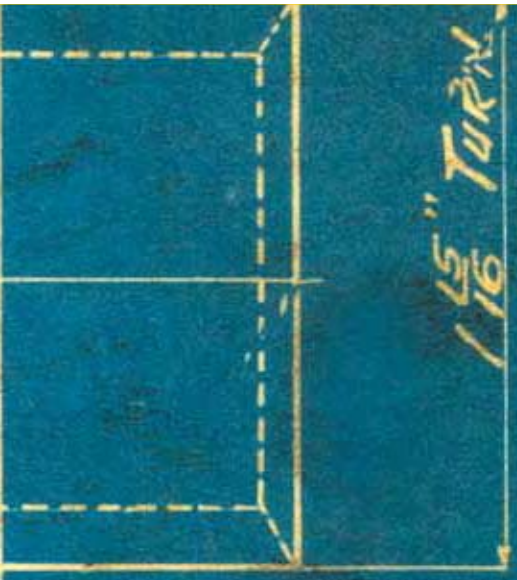

Focusing on the essential:
The strengths of Kramer.
Genuine cost-effectiveness.
Almost limitless versatility.

PROGRAMMED FOR COST-EFFECTIVENESS RIGHT OFF THE DRAWING BOARD.

From the layout and equipment through the robust design to the long-lasting components and professional hydraulics: these are the 50-series wheel loaders from Kramer.

They are economical and offer the key wheel loader qualities just where you need them. With their legendary all-wheel steering and one-piece chassis, they are head and shoulders above all other wheel loader systems. At up to 1000 kg lighter than competitor models, this makes them particularly agile. They are purely and simply „real Kramers“ and are manufactured in one of Europe‘s most modern factories by trained, specialist personnel with typical „Made in Germany“ quality.

Perfect balance:
Perfect qualities.

1 System bearer

Kramer wheel loaders are not only at the technological cutting-edge, they are also economically attractive. These sturdy, all-terrain system bearers are perfectly in tune with the times, since they are compact, powerful, smart and enormously adaptable. These are machines with practically limitless possibilities.

2 Attachment areas

Individual options for optimal use of the Kramer concept: choose from miscellaneous configurations and performance parameters according to model in order to obtain the best possible value for money. This makes the choice of Kramer always the right one.

3 Steering modes

The all-wheel steering of Kramer loaders is legendary, and an important component of our brand identity. In association with certain models and machine types, it can put you on the right track by switching effortlessly to front-wheel steering or crab steering so as to optimise your working rhythm.

4 Comfort zones

The quality of the working environment is a key prerequisite for achieving productivity goals. This is why all machines from Kramer are meticulously designed from the inside out. Modern steering technology, user-friendly design and cockpit comfort are „standard qualities“ that far exceed the norm.

5 Model lines

Kramer is the versatility specialist, a concept that is also manifested in the design, and in the attention paid to the individual model ranges: mini-loaders, wheel loaders, tele wheel loaders, compact telehandlers and telehandlers are specialists in their fields but versatile in their deployment possibilities.

High Balanced Handling®

ALL-ROUND STRENGTHS. FROM PERFORMANCE TO VALUE-FOR-MONEY. FROM EASY HANDLING TO USER COMFORT. FROM FUNCTION TO DESIGN. A RADICAL RETHINK THAT OPENS UP A VISTA OF NEW PERSPECTIVES. ALL UNDER-PINNED BY A SOLID STRUCTURE.

Setting the standard: Comfort and safety.

German quality that allows you to see and feel just how good a driver you can be.

Spaciousness, optimised ergonomics and solid workmanship are by no means a luxury, but are welcome extras offering enhanced security and productivity. Kramer quality can be found throughout but it always starts from the inside.

The cockpit is protected against water spray and is fitted with a ROPS & FOPS protective grille and canopy. And since the switch for selecting the drive direction is situated in a practical fashion on the joystick console, one hand can always remain on the steering wheel. A safe touch... and not just for the occasional driver. The intuitively laid-out switches are easy to reach and once in the cockpit the operator will feel immediately at home.

Welcome to an original.

The 350 model is available with a roomy cab incorporating heating and ventilation (optional). The hinged side windows guarantee good air circulation and the door can be snapped back with ease.

350
750
850
950

1 **Exemplary accessibility.**
The wide-opening engine cover offers centralized access to all components for daily checks and for servicing and maintenance operations.

2 **Roomy cab with heating, ventilation and hinged windows.**
Available on the 350 model as an option.

Kramer highlights:

- Cockpit designed with ergonomics and functionality in mind.
- Intuitively laid-out controls ensuring safe handling of the machine for both professional and occasional drivers alike.
- Roomy cab with heating and ventilation (optional).
- Exemplary accessibility to all components for daily checks, servicing and maintenance operations.

Setting the standard: Hydraulics with 16 kW extra power.

The wheel loader as a tool carrier.

Kramer highlights:

- 16 kW hydraulic power on the Power Flow 350 for hydraulic tool attachments with high power requirements.
- Hydraulic quick-hitch system as standard.
- Dual-action control circuit for effortless manoeuvring of tool attachments.

Power Flow is a powerful drive system for hydraulic tool attachments with high power requirements.

Snow blowers, mulchers, flail mowers and ground preparation devices can now be attached to the wheel loader and work to their full potential – and thanks to the dual-action control circuit they can also be effortlessly positioned with the utmost precision.

powerflow

Setting the standard:
Light and compact.

Kramer highlights:

- Tool attachment transportation on the accompanying trailer.
- Headroom less than 2 m.
- Low transport weight and compact dimensions.

Universal deployment for maximum efficiency.

Tool attachments 350

1 **Tree remover**
2 **Mower** (rotary or flail)
3 **Snow blade and gritter**
4 **Grab bucket**
5 **Road sweeper**

Tool attachments 750 – 1150

6 Bulk materials bucket

7 Pallet forks

8 High-pressure surface wash unit with hand lance

9 Stone shovel

10 Collapsible pallet forks (here in association with the 0 – 30 kph high-speed drive)

11 Side-swing bucket

12 Wood gripper

The basic facts of cost-effectiveness:

Direct paths are the shortest. Less weight saves fuel. Greater efficiency gives you the edge.

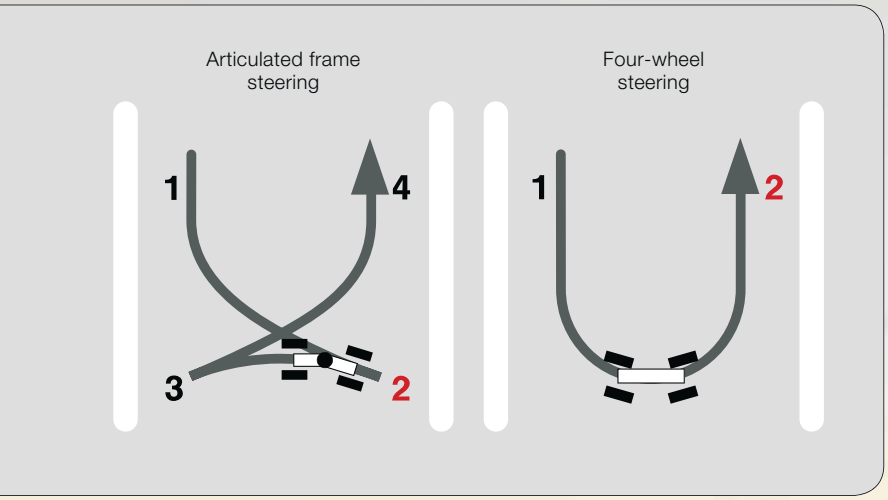

The power-to-weight ratio of the 50s series makes them particularly economical to deploy. Their weight-fuel efficiency is not only ecologically exemplary, but also saves enormously on fuel costs.

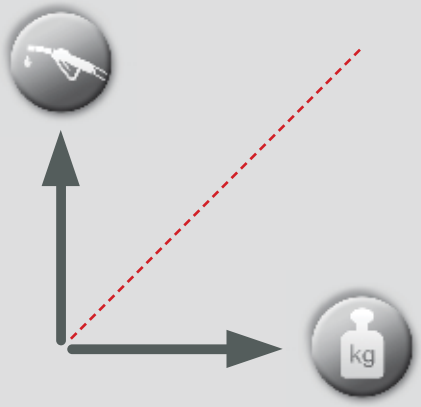

No more detours: going direct is faster, more profitable.
Being able to negotiate tighter turning circles saves on time and fuel. And with a Kramer wheel loader you can also travel faster and manoeuvre more easily over uneven and restrictive terrain.

Now let's talk money: less weight means money-saving opportunities.
With the wheel loaders of the 50-series weighing in at up to 1000 kg lighter than other, comparable machines in the same performance class, this advantage stands out a mile in practice and when calculating their efficiency.

- Optimized power to weight ratio.
- Low transport weight.
- Constant high payload.

Kramer highlights:

- 20 % less kerb weight.
- High fuel efficiency thanks to optimally balanced system components and low kerb weight.
- Time savings on service and maintenance.
- Long life cycle and high resale value.

An agile mover, a dynamic power-house and a lithe performer: the 50s series is made for the future.

Drive physics:
Logic is the focal point.
Safety is the constant.
Reliance lies in the law of nature.

Our focus remains constant: One-piece chassis, four-wheel steering and steering manoeuvrability from lock to lock.

Only four-wheel steering guarantees a consistant payload, since the centre of gravity of the machine only moves along the longitudinal axis and never shifts outwards. This prevents the risk of tipping, and even abrupt steering movements cannot throw the machine out of kilter.

With each wheel loader from Kramer, you can always problem-free lift and transport what the loader has loaded. We call this "Load stability according to the stacker principle".

1 **Precise work and secure placement with no subsequent adjustment:**
The parallel boom brings every load securely and swiftly to its destination.

2 **Load stability that you can always count on:**
Whatever a Kramer wheel loader can pick up it can also securely hoist and transport. Thanks to its design, the centre of gravity of the machine always remains in total alignment.

3 **Stability is the biggest safety back-up.**
The rigid frame provides a stable basis when working on site – stability the driver can really feel. To say nothing of the vehicle width and compact dimensions.

Load stability according to the
STACKER PRINCIPLE

One-piece frame:
The tried and tested backbone of all Kramer wheel loaders.

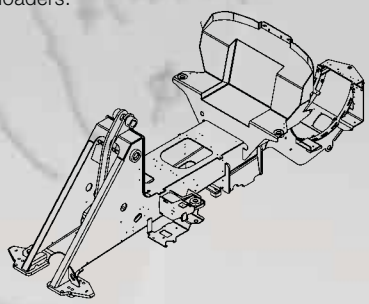

- Constant high payload over the entire steering angle range.
- No risk of tipping on tight bends.
- Security and speed maintained even on difficult terrain.
- Exceptional stability, even on uneven terrain and on tight corners.
- Fast and precise work cycles.

The legendary Kramer all-wheel steering.

Safety means staying in one piece. Just like our rigid frames.
Safety requires contingency planning. And because you never know if the ground is going to give beneath your wheels, the stability of a wheel loader is extremely important.

Manoeuvrability that stands out a mile:
Kramer puts you in the fast lane.
Why go all around the houses? The four-wheel steering of Kramer wheel loaders has played a big part in assuring their reputation for helping users to work better, more quickly and more productively.

The parallel boom:
Keeps lift capacity and load in perfect equilibrium.
Always in the field of view, so that the load can be kept stable and work can proceed quickly and with precision. The high tilt-in/tilt-out angle means that no material is spilt, even with a full bucket.

Formula for Success:
Winning lightness. Convincing simplicity. Get in, drive off: feel the power.

The wide cockpit entrance is designed with safety in mind, minimizing the risk of injury when frequently having to get in and out of the cab.

Roomy, inviting and self-explanatory: a cockpit in which you'll feel at home and get to grips with straightaway. With left hand on the steering wheel and right hand on the joystick, the driver has everything firmly under control. For maximum security, a combined brake/inching pedal is built-in.

An ideal man-machine combination: The Universal Design from Kramer Allrad.

The quicker you can familiarize yourself with a machine, the quicker it becomes a natural tool in your hands. The compact construction and clear visibility mean that the driver is always in the picture. The cab is particularly spacious and comfortable, and offers an all-round view. Its robustness and collision protection make it forgiving of small driver errors, and the intuitive operation ensures that the interaction between man and machine goes without a hitch. A real plus for all occasional drivers who want to get the best out of a machine from the start.

350
750
850
950

Petite silhouette, 360° all-round visibility and complete manoeuvrability: the Universal Design of Kramer wheel loaders makes them a favourite when it comes to rental parks. And since there are no parts in the danger zone and plastic parts such as headlamps and indicators are flush-fitted in the machine design, even minor “shunts” have no expensive consequences.

Insight:
Understanding relationships. Recognizing success factors. Getting the results you want.

Overview
The panoramic cab with 360° all-round view and permanent visibility of whatever implement is being used.

Practice gives the best yardstick of value.
And practice makes perfect.

With Kramer wheel loaders, savings – of both time and money – and the best possible interaction between man and machine are always to the fore: for operation, driving and maintenance. From the display through the joystick to the daily visual checks under the hood. Nothing has been overlooked. It makes business synonymous with pleasure. Day in, day out.

350
750
850
950
1150

Kramer highlights:

- Exemplary accessibility to all components for daily checks, servicing and maintenance operations.
- Technical intelligence in every detail.
- A winner when it comes to total cost of ownership.

Intelligence
The joystick is ergonomically designed to help make work easier.

Stroke of genius
An elegant solution has been found for access to the hydraulic control unit.

Time savings
Daily battery, engine and hydraulic checks at-a-glance. Plus the radiator is easy to access and clean.

The winning equation:
When use is maximized so are the profits.

From a tried and trusted classic to a system bearer for the future: Intelligent engine and hydraulics management and high compatibility with a wide variety of tool accessories make Kramer wheel loaders the ideal performance platform for any tasks that may arise.

Kramer highlights:

- Versatile performance profile.
- Easy handling.
- Safe deployment.
- Hydraulic quick-hitch system as standard.
- A flexible, tried-and-tested performance platform with an unparalleled diversity of options and tool attachments.

Versatility means greater use. The more an item is used, the more it is of value. And the value shows.

Investments are only worthwhile if they can increase work yield and contribute to better exploitation of existing resources.

Kramer Allrad tele wheel loaders are not only versatile and highly reliable machines, but also intelligent and future-proof system bearers for the construction industry, local authorities, the recyc-ling industry, gardening and landscaping, and hire firms. They help improve work and logistics processes and grow into their specialist tasks. They ship international industry standards and easily adaptable performance profiles in cost-effective form.

They grow with you. They get stronger. They exceed all your expectations. They quickly become indispensable.

The Kramer quick-hitch:

ALWAYS IN RECORD TIME.

For 40 years attachements for Kramer wheel loaders have been changed in double quick time – Just switch, and secure.

- Locking above the lower bucket pin height
- Safety valve to prevent unwanted release
- Handling and permanent visual contact from the driver's cab

1 Simply drive up to the **attachement**
2 **Pick it up** hydraulically from the driver's seat
3 With visual contact, **secure or detach** at the touch of a button.

5 model ranges:
Perfect formation.
Ideal balance of payload, performance and bucket capacity.

ALL KRAMER LOADERS COME OFF THE PRODUCTION LINE OF A LEADING COMPACT MACHINERY MANUFACTURER BASED IN THE HEART OF EUROPE. THEY BEAR THE HALLMARK OF QUALITY, STABILITY AND CONSISTENCY THAT YOU CAN RELY ON: TYPICALLY “MADE IN GERMANY”. EVERY MODEL IS BUILT TO LAST AND IS A MODULAR ELEMENT OF AN OVERALL SYSTEM.

ONE PART FITS INTO ANOTHER, AND EVERYTHING IS FUTURE-PROOFED, FOR LONG-TERM COST-EFFECTIVENESS.

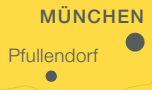

Find a dealer at: www.kramer.de/Haendler

	Max. engine output	Bucket capacity	Max. payload	Charge weight *	Turning radius (Tyres)	Max. speed	Max. load-over height
MINI-LOADERS							
350 Canopy	27 kW / 37 hp	0.35 – 0.55 m³	970 kg	1665 kg	1950 mm	0 – 20 kph	2680 mm
350 CAB	27 kW / 37 hp	0.35 – 0.55 m³	970 kg	1740 kg	1950 mm	0 – 20 kph	2680 mm
180	23 kW / 31 hp	0.3 – 0.4 m³	950 kg	1860 kg	1940 mm	0 – 20 kph	2458 mm
280	28 kW / 40 hp	0.65 – 1.1 m³	1900 kg	3300 kg	2430 mm	0 – 20 kph	2820 mm
WHEEL LOADERS							
750	45 kW / 61 hp	0.75 – 1.15 m³	2300 kg	4200 kg	2550 mm	0 – 30 kph	2915 mm
850	45 kW / 61 hp	0.85 – 1.3 m³	2350 kg	4500 kg	2550 mm	0 – 30 kph	3100 mm
950	58 kW / 79 hp	0.95 – 1.6 m³	2500 kg	4700 kg	2780 mm	0 – 30 kph	3120 mm
1150	58 kW / 79 hp	1.15 – 1.8 m³	3500 kg	5900 kg	2850 mm	0 – 30 kph	3235 mm
380	45 kW / 61 hp	0.75 – 1.15 m³	2400 kg	4300 kg	2900 mm	0 – 40 kph	2915 mm
480	58 kW / 79 hp	0.85 – 1.3 m³	2600 kg	4750 kg	2900 mm	0 – 40 kph	3100 mm
580	58 kW / 79 hp	0.95 – 1.5 m³	2750 kg	4900 kg	2900 mm	0 – 40 kph	3050 mm
680	58 kW / 79 hp	1.05 – 1.6 m³	3100 kg	5650 kg	2950 mm	0 – 40 kph	3050 mm
780	58 kW / 79 hp	1.15 – 1.8 m³	3500 kg	6100 kg	2950 mm	0 – 35 kph	3200 mm
880	88 kW / 120 hp	1.5 – 2.5 m³	4500 kg	8400 kg	3450 mm	0 – 35 kph	3530 mm
TELE WHEEL LOADERS							
750T	45 kW / 61 hp	0.75 – 1.15 m³	2000 kg	5100 kg	2550 mm	0 – 30 kph	4510 mm
680T	58 kW / 79 hp	0.95 – 1.5 m³	2600 kg	5950 kg	2950 mm	0 – 40 kph	4450 mm
COMPACT TELEHANDLERS							
1245	23 kW / 31 hp	0.4 – 1.03 m³	1200 kg	2530 kg	2607 mm	0 – 20 kph	4130 mm
2506	50 kW / 68 hp	0.85 – 1.8 m³	2500 kg	4500 kg	3670 mm	0 – 30 kph	5600 mm
TELEHANDLERS							
3307	88 kW / 120 hp	1.2 – 2.5 m³	3300 kg	7200 kg	3600 mm	0 – 40 kph	7050 mm
4507	88 kW / 120 hp	1.2 – 3.0 m³	4400 kg	8100 kg	3600 mm	0 – 40 kph	7050 mm
4009	88 kW / 120 hp	1.2 – 3.0 m³	4000 kg	8600 kg	3850 mm	0 – 40 kph	8825 mm

* Vehicle weight of basic model with standard bucket

Innovation born of tradition:

Robust program.
State-of-the-art manufacturing.
Competent partners.

High Balanced Handling®

Genuine competence only becomes established when know-how, ability and customer-orientation have been consolidated over many years to become a distinctive style. The success story of Kramer is telling proof of this adage:

- **Over 50 years of experience in the development,** design and production of intelligent, durable and versatile construction machinery. Structures that have grown organically.
- **Innovation bringing progress to life.** Kramer constantly strives to make things work better. This is how the brand has become the acknowledged pioneer and market leader that it is today.
- **Consistent customer orientation, personal contacts,** the flexibility and short decision pathways of a medium-sized enterprise, along with the security of guaranteed and rapid spare parts procurement with no red tape.
- **A broad one-stop product and service spectrum:** "Made in Germany", in the Bodensee region. Development, production, purchasing and sales all on one site.
- **The most up-to-date manufacturing facilities with in-house paint shop** and an experienced workforce, who personally invest a great deal of value in the quality of "their machines".
- **Robust, long-standing trading partners** and well-trained contacts who represent Kramer out of conviction and for whom one thing counts above all else: loyal and contented customers.

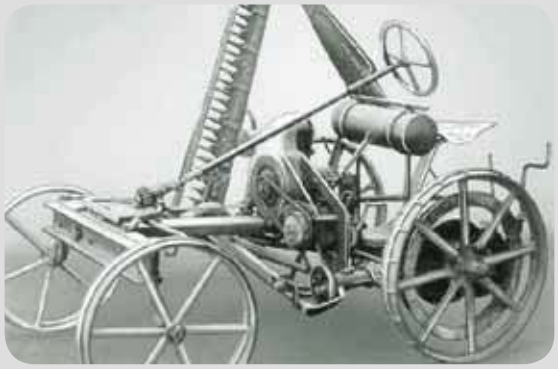

1925 Founding of the company as a manufacturer of motor mowers.
1963 Kramer is the first manufacturer to present a hydraulic quick-hitch mechanism.

1965 The innovative load stabiliser for the boom arm is developed by Kramer engineers.
1987 The first all-wheel-steering wheel loader is launched on the market. The steering system continues to be found in all Kramer vehicles.

1992 In order to satisfy customer requirements, Kramer develops a wheel loader with telescopic boom. The extra pallet height and reach give customers what they were looking for.
2000 The Neuson and Kramer companies merge to become Neuson Kramer Baumaschinen AG, a company specialising in the development and manufacturing of compact machinery.

2003 Kramer presents the first wheel loader series with stepless high-speed drive (“Ecospeed”) and highway-certified trailer coupling.
2005 A new vehicle segment – the telehandler – is developed and unveiled. Through cooperation with the agricultural machinery manufacturer, Claas, telehandlers are successfully marketed to the agricultural sector.

2007 A new company is born: Neuson Kramer Baumaschinen AG and Wacker Construction Equipment AG come together to form Wacker Neuson SE, a comprehensive provider of Light and Compact Equipment.
2008 Due to increasing demand and the expansion of the product range, Kramer builds a new factory from scratch in Pfullendorf. This is one of the most up-to-date manufacturing sites in Europe.

50-series:

The facts speak for themselves.
You're sure to be captivated.

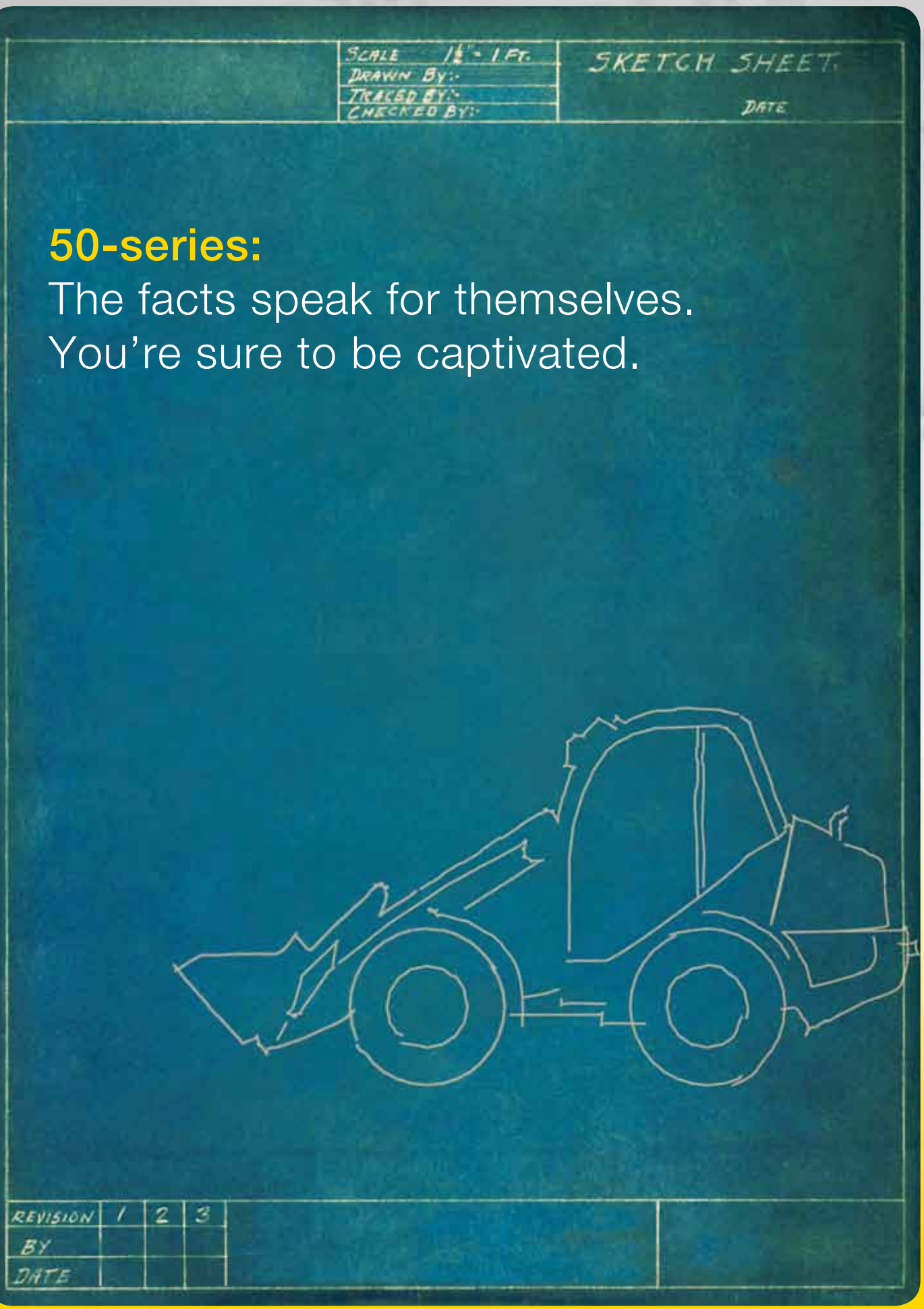

350
750
850
950
1150

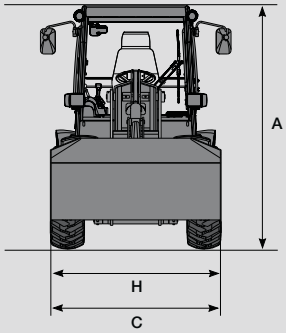

Wheel loader with standard bucket and standard tyres
(front view)

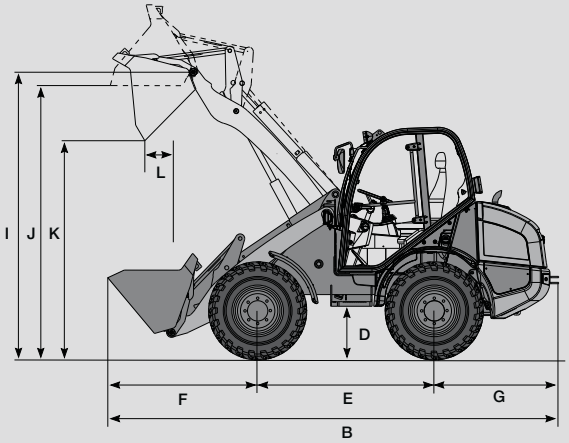

Wheel loader with standard bucket and standard tyres
(side view)

DIMENSIONS		350	750	850	950	1150
A	**Height**	1980 mm	2480 mm	2510 mm	2650 mm	2700 mm
B	**Length**	4080 mm	4840 mm	5040 mm	5360 mm	5800 mm
C	**Width**	1200 mm	1720 mm	1720 mm	1890 mm	1890 mm
D	**Ground clearance**	230 mm	300 mm	300 mm	325 mm	375 mm
E	**Wheelbase**	1525 mm	1920 mm	1920 mm	2050 mm	2150 mm
F	**Centre of front axle** to tip of teeth	1360 mm	1570 mm	1770 mm	1880 mm	2170 mm
G	**Centre of rear axle** to end of vehicle	1195 mm	1350 mm	1350 mm	1430 mm	1480 mm
H	**Bucket width**	1250 mm	1750 mm	1850 mm	1950 mm	2150 mm
I	**Pin height**	2790 mm	3065 mm	3250 mm	3270 mm	3500 mm
J	**Load-over height**	2680 mm	2915 mm	3100 mm	3120 mm	3285 mm
K	**Dump height**	2250 mm	2400 mm	2500 mm	2520 mm	2720 mm
L	**Dump reach**	165 mm	750 mm	660 mm	750 mm	660 mm
	Pallet height	2680 mm	2800 mm	3000 mm	3010 mm	3280 mm
	Turning radius					
	Tyres	1950 mm	2550 mm	2550 mm	2780 mm	2850 mm
	Track circle	2700 mm	2350 mm	2350 mm	2560 mm	2650 mm
	Bucket	2950 mm	3320 mm	3450 mm	3900 mm	4050 mm

OPERATIONAL DATA	350	750	850	950	1150
Bucket capacity	0.35 – 0.55 m³	0.75 – 1.2 m³	0.85 – 1.4 m³	0.95 – 1.6 m³	1.15 – 1.8 m³
Weight ***	1665 / 1740 kg **	4200 kg	4500 kg	4700 kg	5900 kg
ENGINE					
Make	Yanmar	Deutz	Deutz	Deutz	Deutz
Type/Model	3TNV88 / 3TNV84T *	D 2011 L04 W 4-cyl-in-line engine, water-cooled			
Output	23 kW / 31 hp 27 kW / 37 hp *	45 kW / 61 hp @ 2300 rpm	45 kW / 61 hp @ 2300 rpm	58 kW / 79 hp @ 2300 rpm	58 kW / 79 hp @ 2300 rpm
Max. torque	107 Nm @ 1560 rpm 124 Nm @ 1560 rpm *	210 Nm @ 1700 rpm	210 Nm @ 1700 rpm	270 Nm @ 1600 rpm	270 Nm @ 1600 rpm
Engine displacement	1642 cm³ / 1496 cm³ *	3620 cm³	3620 cm³	3620 cm³	3620 cm³
Emissions	Tested and certified as per 97/68 EC, emissions standard level 3				
POWER TRANSMISSION					
Drive	Continuously variable hydrostatic axial-piston gearbox, all-wheel drive, brake/inching pedal				
Drive speed	0 – 20 kph	0 – 20 kph 0 – 30 kph *	0 – 20 kph 0 – 30 kph *	0 – 20 kph 0 – 30 kph *	0 – 20 kph 0 – 30 kph *
Axles	Cross member made of cast steel with wheel hub motor	Planetary steering axles	Planetary steering axles	Planetary steering axles	Planetary steering axles
Total oscillation angle	–	22°	22°	22°	22°
Differential lock	Differential gear mechanism	Self-locking differential	Self-locking differential	100%	100%
Service brake	Hydrostatic	Hydraulic disc brake			
Parking brake	Electrohydraulically actuated spring-operated multidisc	Mechanical disc brake	Mechanical disc brake	Mechanical disc brake	Mechanical disc brake
Standard tyres	27 x 8.50-15	12.5-18	12.5-20	14.5-20	405/70-24
STEERING AND WORK HYDRAULICS					
Mode of operation	Hydrostatic all-wheel steering				
Steering pump	–	Work pump via priority valve			
Steering ram	–	Double-acting, with automatic synchronization in final position			
Max. steering angle	2 x 38°	2 x 40°	2 x 40°	2 x 40°	2 x 40°
Work pump	Gear pump	Gear pump	Gear pump	Gear pump	Gear pump
Flow rate	20 l/min	50 l/min	71 l/min	71 l/min	84 l/min
Pressure	240 bar	210 bar	210 bar	210 bar	250 bar
Filter	–	Combined suction reflux filter			
Pressure limitation	–	Primary pressure limitation, secondary pressure in tilt ram/lift ram			
KINEMATICS					
Model	Z-kinematics with optimized parallel motion	Parallel kinematics	Parallel kinematics	Parallel kinematics	Parallel kinematics
Lifting capacity / Tear-out force	13 / 13 kN	31 / 29 kN	40 / 35 kN	41 / 39 kN	48 / 44 kN
Raising / Lowering	6.7 / 5.0 sec	5.3 / 2.9 sec	5.5 / 3.7 sec	6.6 / 5.0 sec	5.6 / 4.2 sec
Tilting in / Tilting out	0.6 / 0.7 sec	0.9 / 1.5 sec	1.0 / 1.5 sec	1.2 / 1.8 sec	1.3 / 1.5 sec
Tilt-in / tilt-out angle	40° / 45°	50° / 45°	50° / 45°	50° / 45°	50° / 45°
Tipping load (standard bucket)	1250 kg	3000 kg	3200 kg	3420 kg	4140 kg
Tipping load (pallets)	–	2375 kg	2500 kg	2625 kg	3625 kg
Payload S = 1.25 kg (pallets)	750 kg	1900 kg	2000 kg	2100 kg	2900 kg
Payload S = 1.67 kg (pallets)	560 kg	1430 kg	1500 kg	1550 kg	2170 kg
Payload in transport position S = 1.25 kg (pallets)	970 kg	2300 kg	2350 kg	2500 kg	3500 kg
Scraping depth	50 mm	50 mm	60 mm	53 mm	40 mm
CAPACITIES					
Fuel tank / Hydraulic fluid tank	30 / 40 l	60 / 50 l	60 / 50 l	60 / 50 l	60 / 50 l
NOISE EMISSIONS	as per 2000/14/EU				
ELECTRIC SYSTEM					
Operating voltage	12 V	12 V	12 V	12 V	12 V
Battery / alternator	72 Ah / 55 A	88 Ah / 95 A	88 Ah / 95 A	88 Ah / 95 A	88 Ah / 95 A
Starter	2.3 kW	2.3 kW	2.3 kW	2.3 kW	2.3 kW

* Option ** Cab *** Vehicle weight of basic model with standard bucket

STANDARD EQUIPMENT

350 • 750 • 850 • 950 • 1150

CANOPY VARIANTS

350 Generously-dimensioned canopy with rear screen for weather protection, ROPS/FOPS-certified. Instrument panel.
Neatly designed instrument console with illuminated controls and ergonomically arranged tip switches.

Driver's seat: mechanically-sprung driver's seat (ISO 7096) with automatic seatbelt and weight, backrest and horizontal adjustment.

CAB

750 - 1150 Soundproofed, vibration-insulated, 4-point suspension cab, with large, curved, tinted windows (ROPS/FOPS-certified). Excellent all-around visibility from a spacious and comfortable work environment for increased safety and efficiency. Optimized visibility for a maximum dump height. Extremely roomy cab with a large number of storage possibilities.

Instrument panel: Neatly designed instrument panel with illuminated controls and ergonomically arranged tip switches.

Driver's seat: Mechanically-sprung comfort seat with automatic seat belt; weight, backrest, horizontal adjustment; fabric cover and integrated, adjustable armrest.

Heating, ventilation: easy-to-operate, powerful 3-speed heating and ventilation with recirculated-air mode.

Rigid steering column

Sun visor

Screen wipers, front and rear. The double wiper-blade on a Kramer covers 85 % of the front windscreen for optimal visibility. The large washer fluid container offers extended use before the need for refill.

Rear-view mirrors: Large outside mirrors, foldable to notched positions on either side.

750 - 1150 **Floor mat:** The floor mat is level with the frame. This enables easy cleaning of the cab interior.

Cab lights

Access. Mounting/alighting is possible on the left-hand side using the large, convenient steps. The right side window can be opened and locked for ventilation / communication (gap) or fully back.

Fully-glazed doors for optimal view to the sides. The door can be opened and locked in two positions (gap or 180 °).

Large tinted windows for better visibility in the work area and better all-round visibility.

Joystick console: Ergonomic layout of driver's control console. Mechanical servo-controlled joystick for raising/lowering the boom and tilting in/out, with a toggle switch for selecting the driving direction. Mechanical servo-controlled 3rd control circuit for locking/unlocking the quick hitch facility and for running hydraulic implements, including for continuous operation.

12 V socket with cigar lighter

LIGHTS

750 - 1150 **Rear light**
Brake light
Indicators
2 front headlights with main beam and side light

ENGINE COVER

Opens wide for optimal maintenance access.

QUICK-HITCH FACILITY

Hydraulic quick-hitch facility

ENGINE AIR SUPPLY

Via cyclone air filter with integrated safety cartridge

KEY SYSTEM

One-key system for doors, engine hatch and fuel tank.

OPTIONS

350 • 750 • 850 • 950 • 1150

CAB WITH HEATING AND VENTILATION

350 Highway-certified lighting
Rear windscreen heating
750 - 1150 FOPS-II protective grille
Protective grille for front windscreen
Driver's seat in synthetic leather
Radio unit
1 working light at the rear
Comfort seat
Air-sprung driver's seat
Rotary beacon
2 front working lights
Document box

PERFORMANCE OPTIONS

350 High-performance engine
Hydraulic auxiliary control circuit, front & rear
Power Flow work hydraulics (for large engine only)
Floating position
Low-speed control and manual throttle
Unpressurised reflux with overflow oil line
Soot filter
Load stabiliser
Trailer-pulling system
Electric socket for front and rear tool attachments

750 - 1150 WORK PLATFORM ATTACHMENTS

PREHEATING

Fuel, engine oil and hydraulic fluid

TYRES

350 Lawn tyres
750 - 1150 Wide-base tyres (direction-independent)
Farm tractor profile
Tyres for industrial applications
Puncture protection kit
Foam-filled tyres

SAFETY & SECURITY

350 Underbody protection
Hose burst valves for lift and tilt rams
Shielding of moving engine parts
Tool set
Engine immobilizer
Reversing warning system
Protection against aggressive environments
Fire extinguisher
Warning stripes as per DIN 30710
Rotary beacon

DRIVE

750 - 1150 High speed 0 – 30 kph

PAINT OTHER THAN STANDARD

BIODEGRADABLE OIL

PANOLIN HLP Synth46

WARRANTY EXTENSION

TOOL ATTACHMENTS

350 • 750 • 850 • 950 • 1150

350 Pallet forks, standard bucket, grab bucket, lightweight materials bucket, super-lightweight materials bucket, high-tilt bucket, bulk materials bucket, side-swing bucket, snow blade, road sweeper.

750 - 1150 Material pusher, work platform, front ripper, snow shovel.

Other tool attachments on request.

We reserve the right to make modifications without notice. No responsibility is taken for the accuracy of this information.
The provisions of the contractual agreement shall be considered definitive.

You won’t find the original just anywhere:

AUTHORIZED KRAMER PARTNERS ARE ALWAYS THE RIGHT ADDRESS.

10/2010 **art.nr.** 1000190594

Kramer-Werke GmbH
Wacker Neuson Strasse 1
88630 Pfullendorf
Allemagne
Tel. 00 800 90 20 90 20
Fax +49(0)7552 92 88-234
info@kramer.de
www.kramer.de

kramerALLRAD®

Kramer-Werke GmbH is a subsidiary of Wacker Neuson SE, Munich.